ORTAL
YOUR LIFE. YOUR FIRE

90 TSN

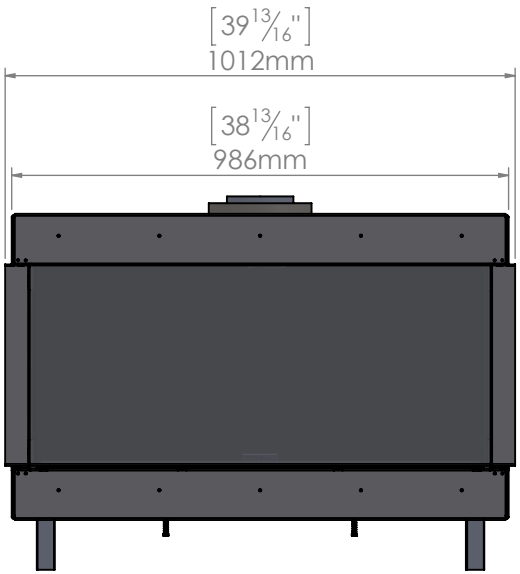

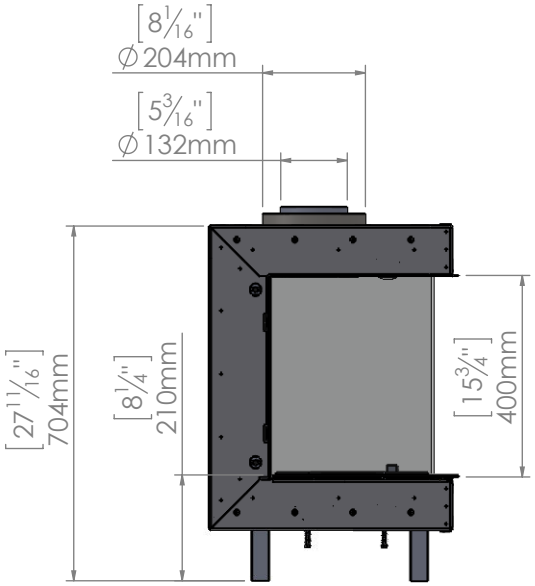

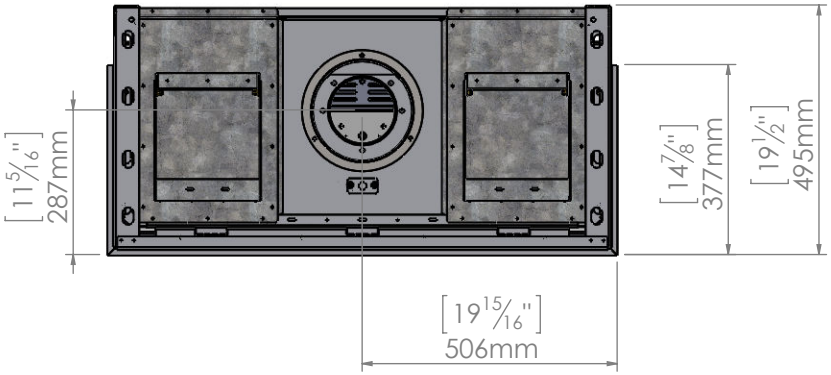

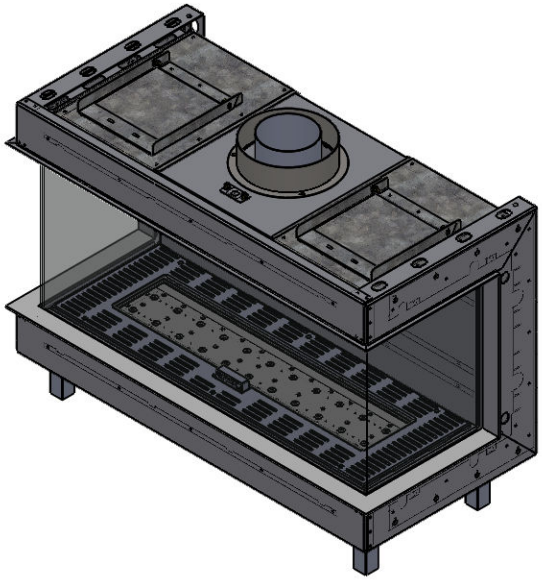

11/12/2018