ORTAL
YOUR LIFE. YOUR FIRE

90 LSN

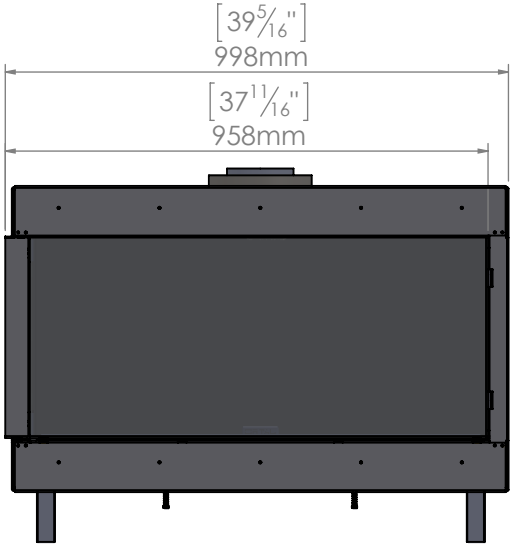

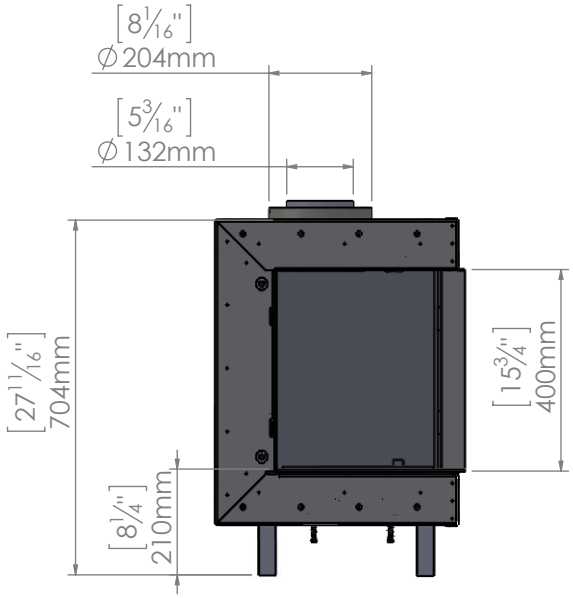

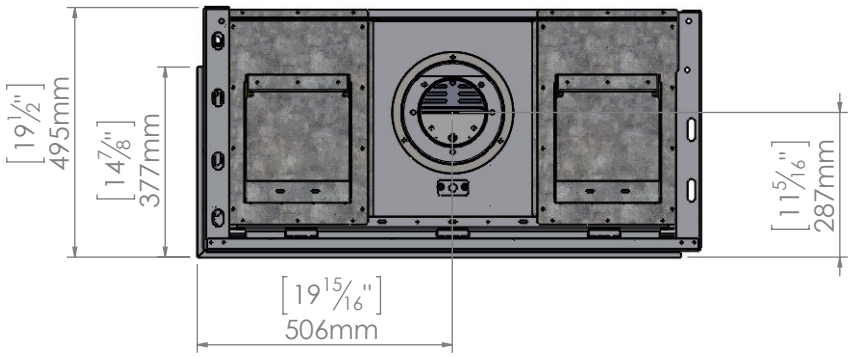

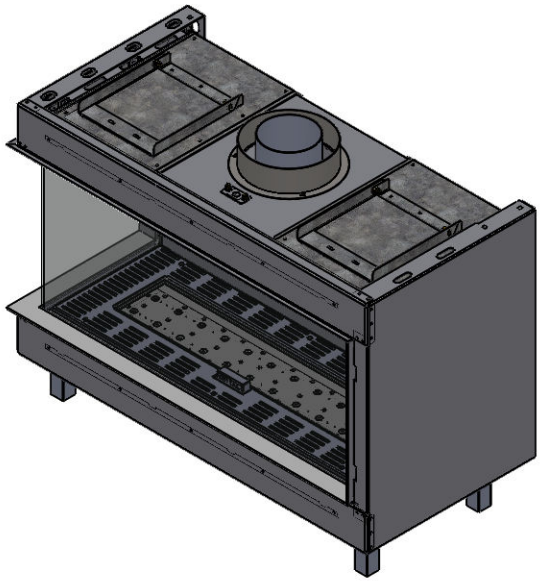

11/12/2018