ORTAL
YOUR LIFE. YOUR FIRE

250H LS

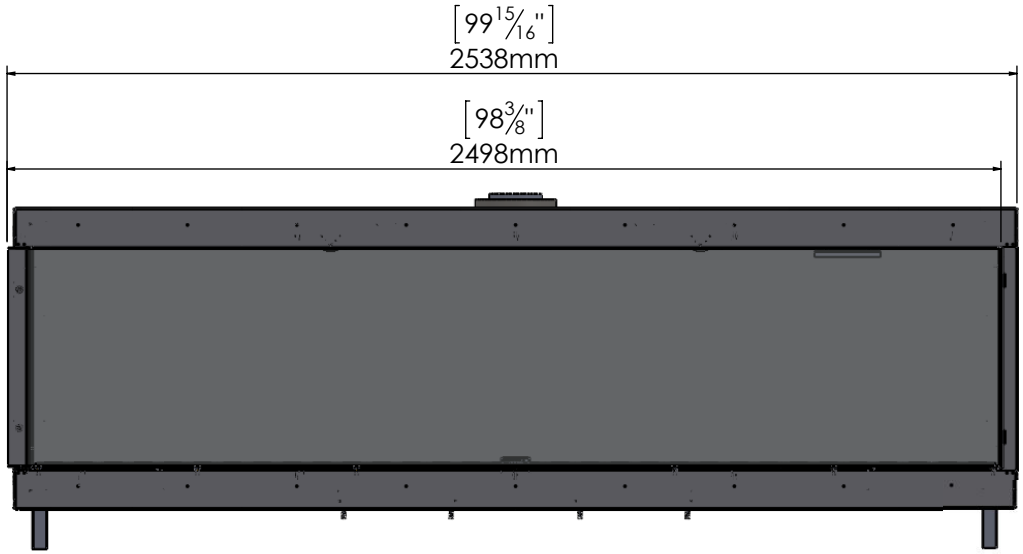

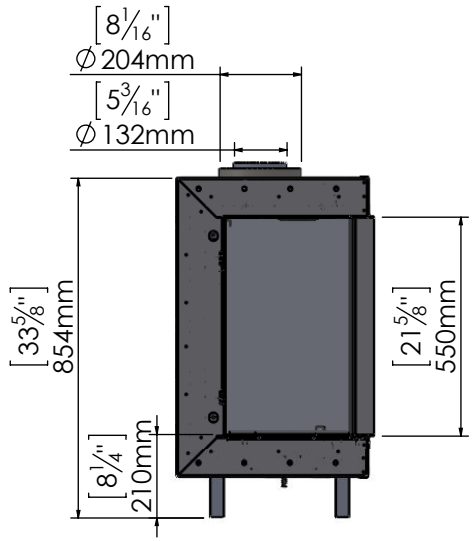

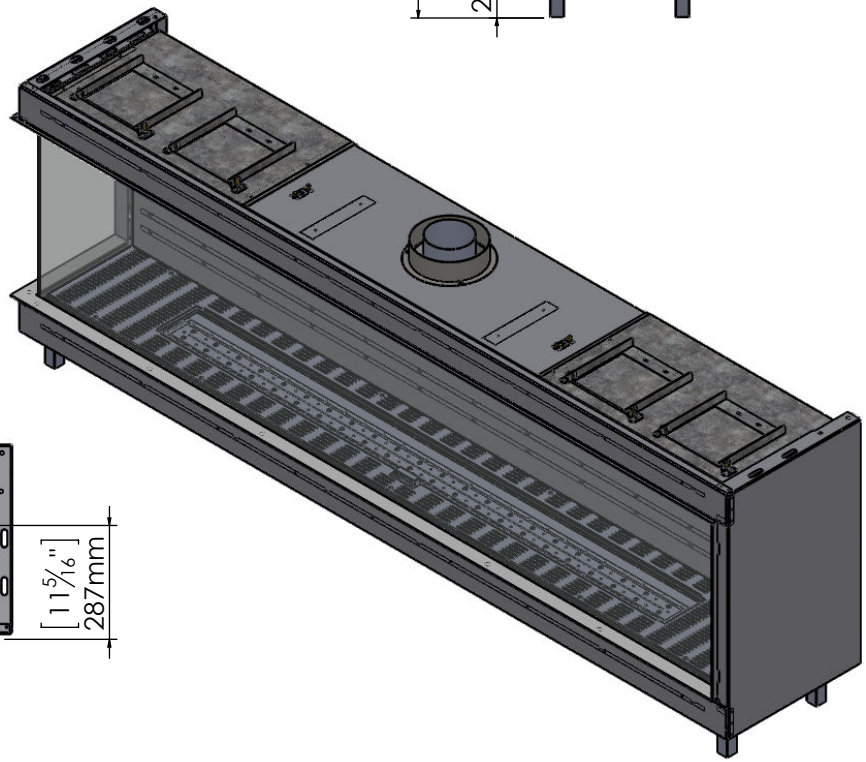

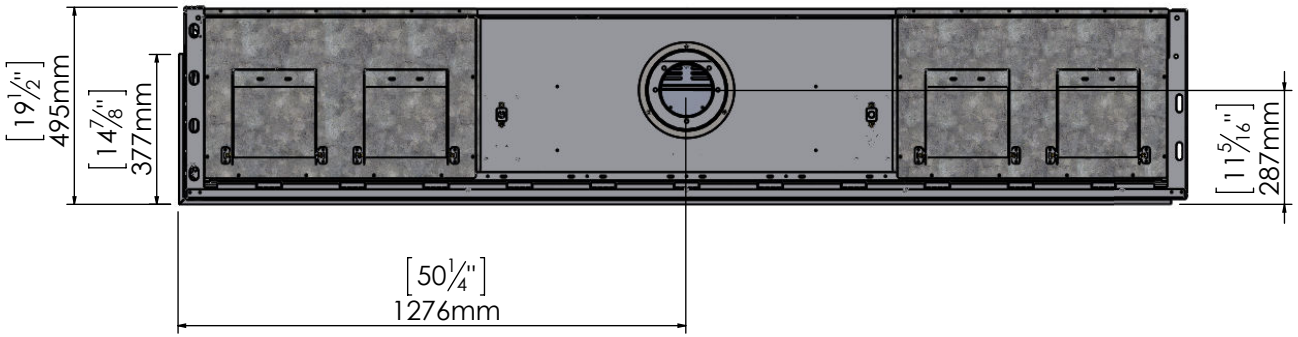

11/21/2018