ORTAL
YOUR LIFE. YOUR FIRE

200 TS N

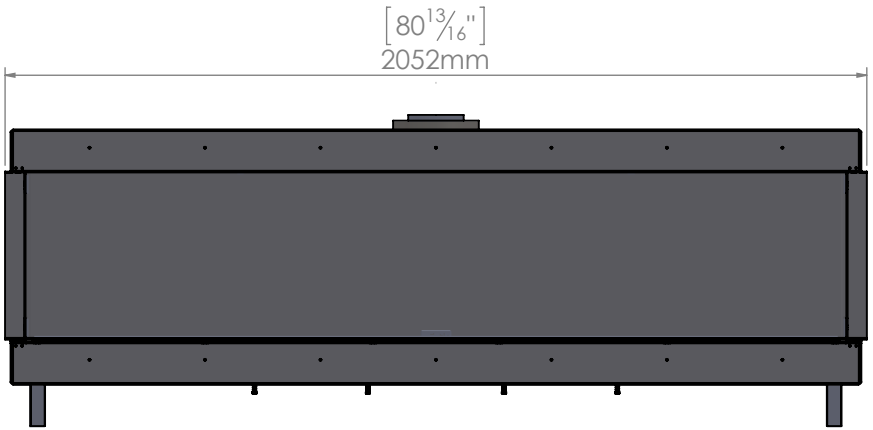

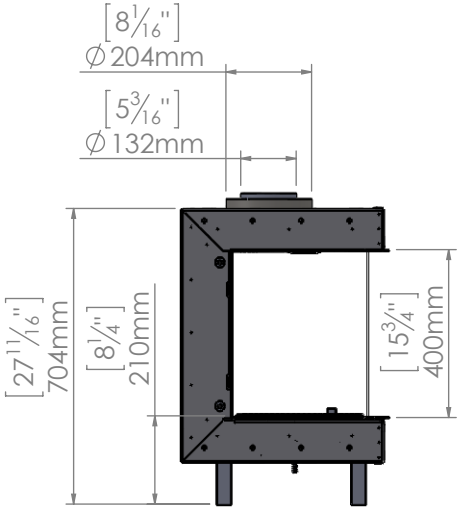

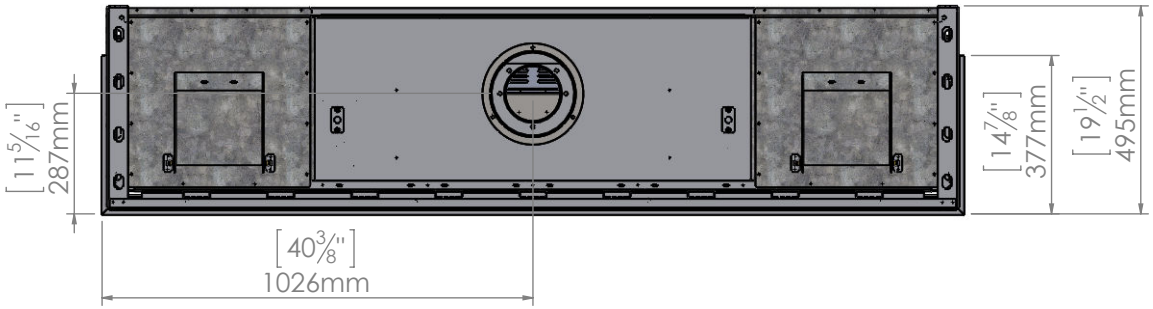

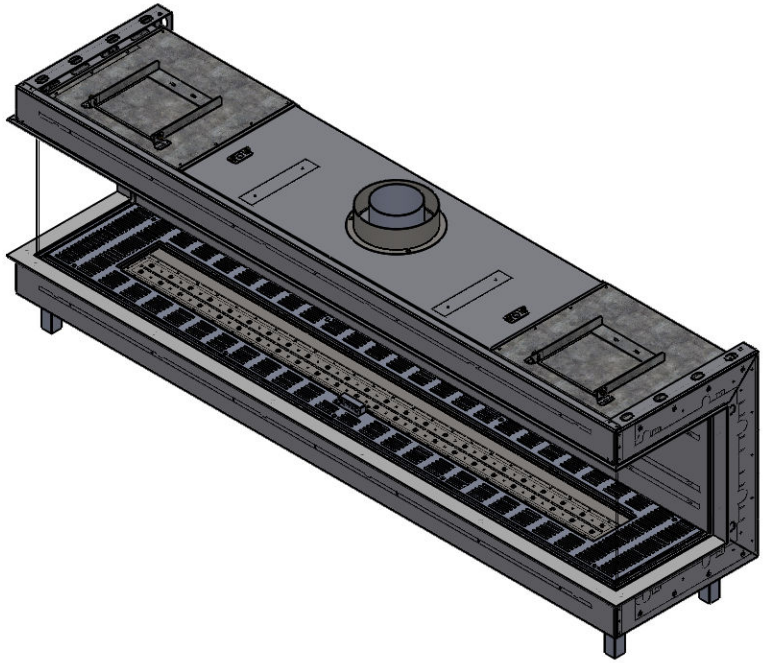

1/13/2018