ORTAL
YOUR LIFE. YOUR FIRE

200 RSN

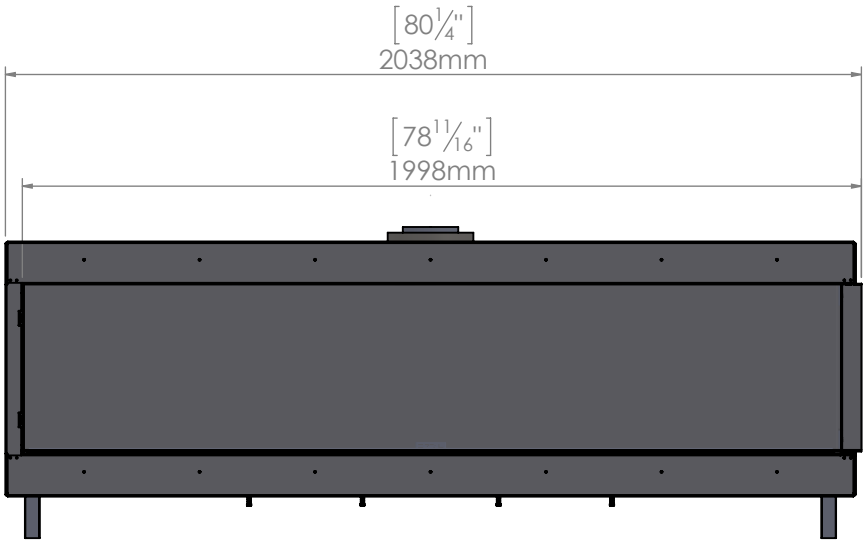

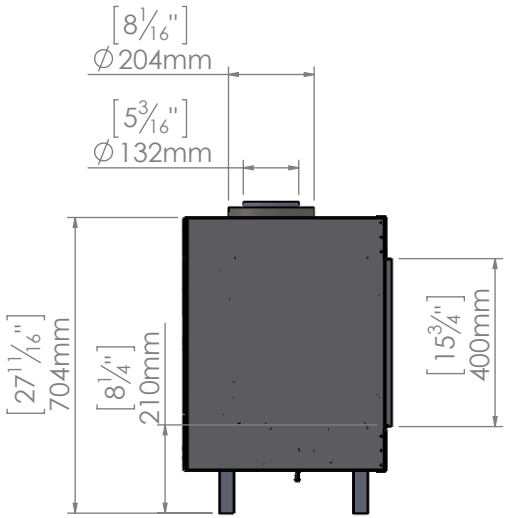

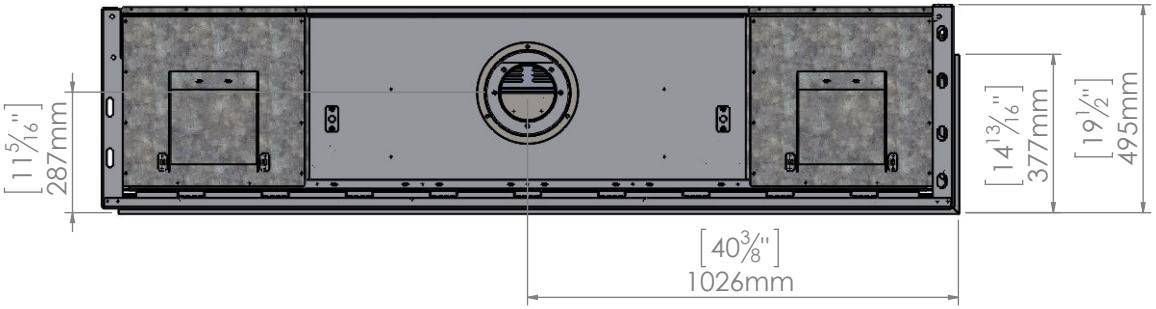

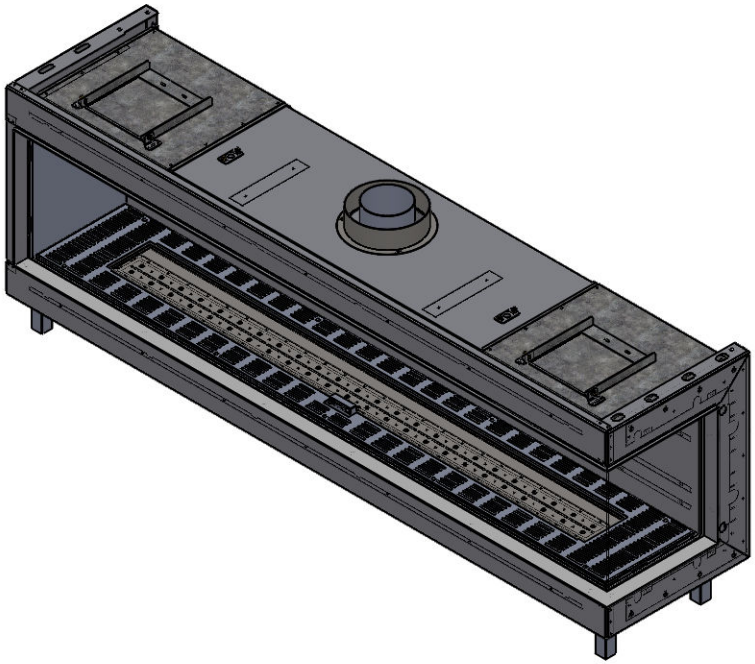

1/13/2018