ORTAL
YOUR LIFE. YOUR FIRE

170 LSN

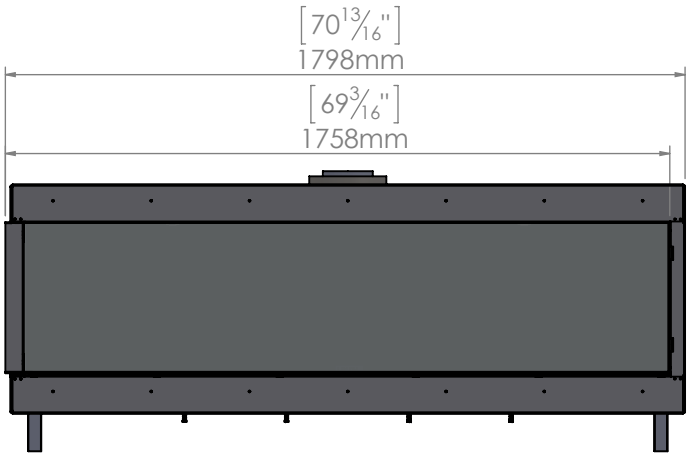

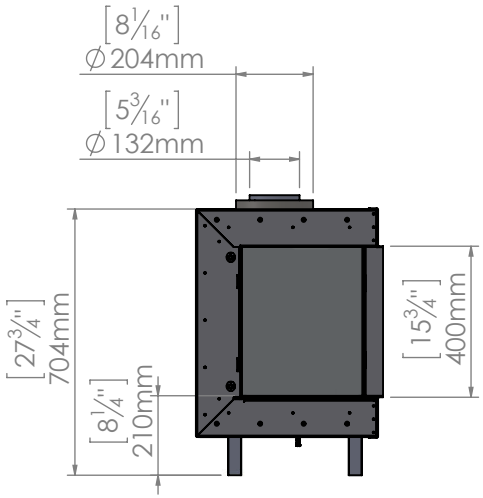

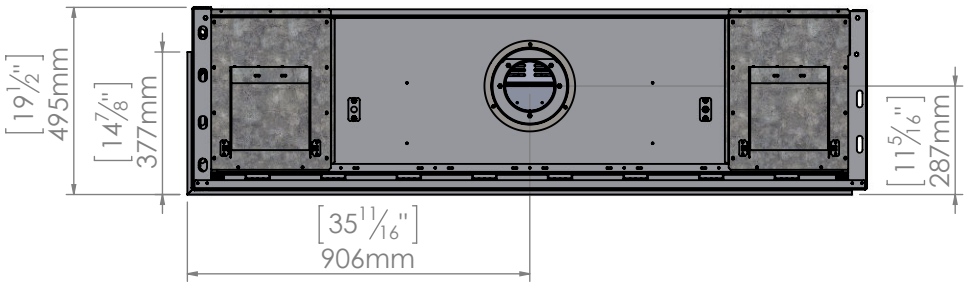

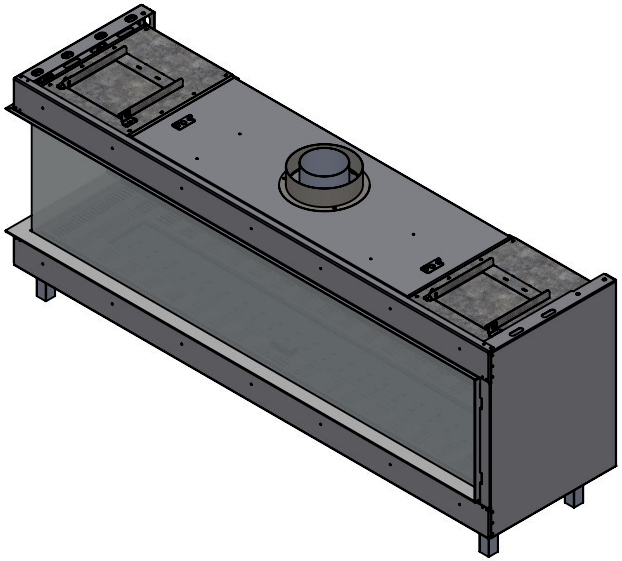

11/13/2018