ORTAL
YOUR LIFE. YOUR FIRE

170H TS

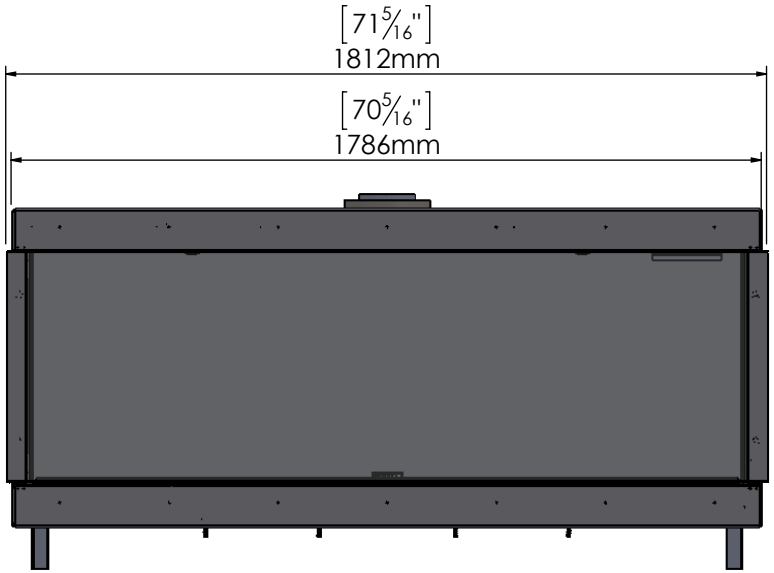

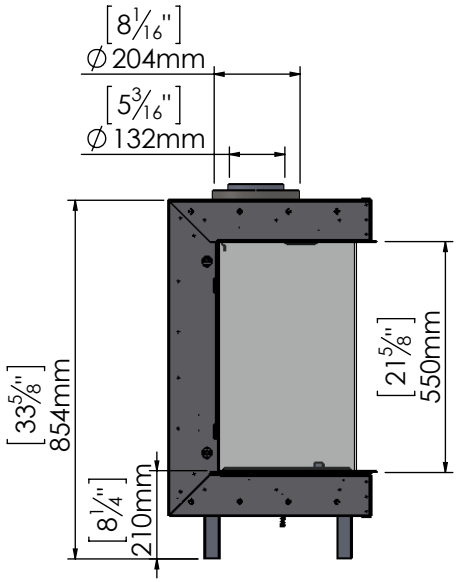

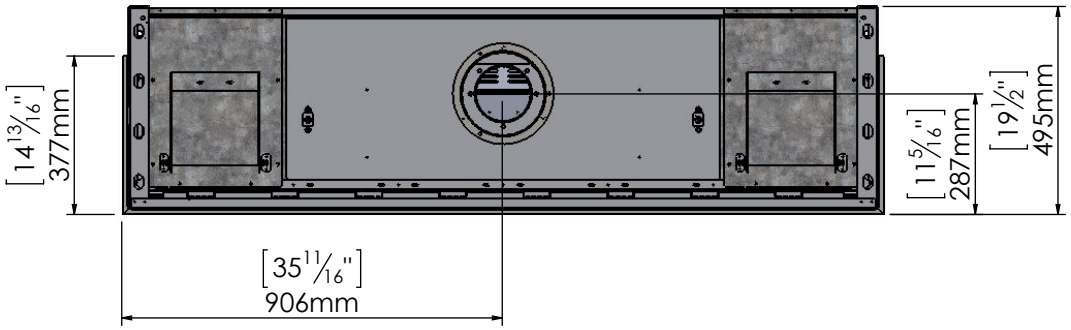

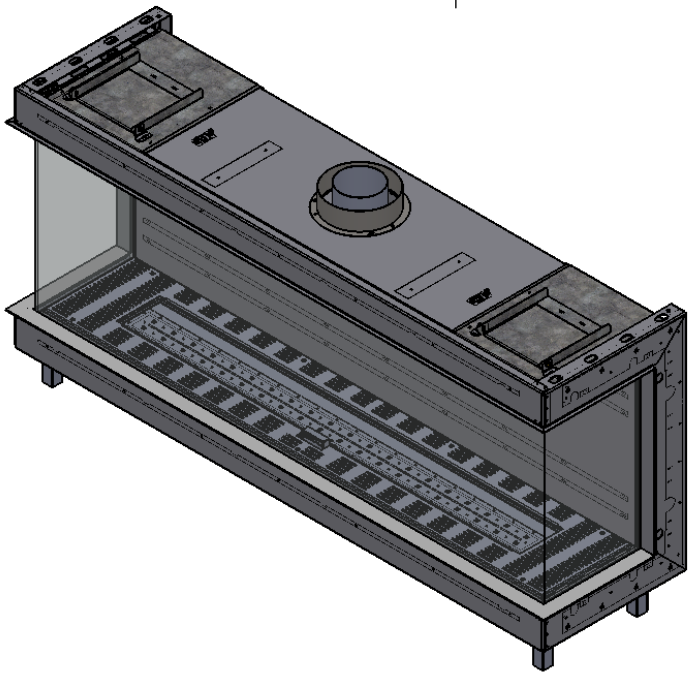

11/22/2018