ORTAL
YOUR LIFE. YOUR FIRE

170H LS

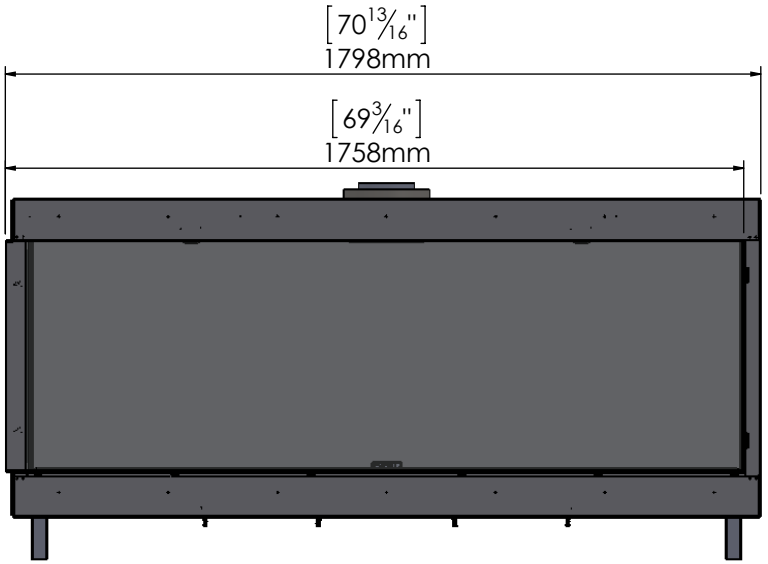

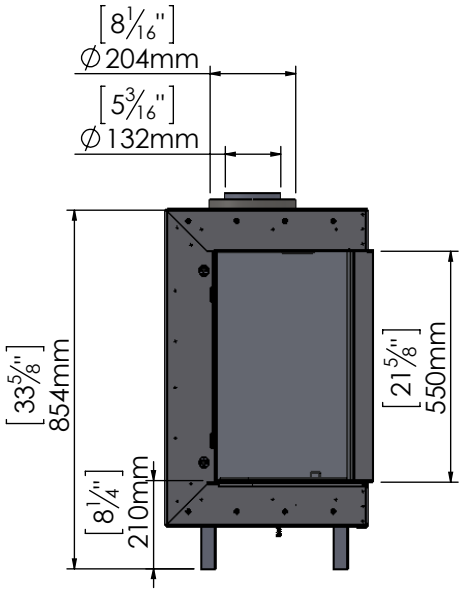

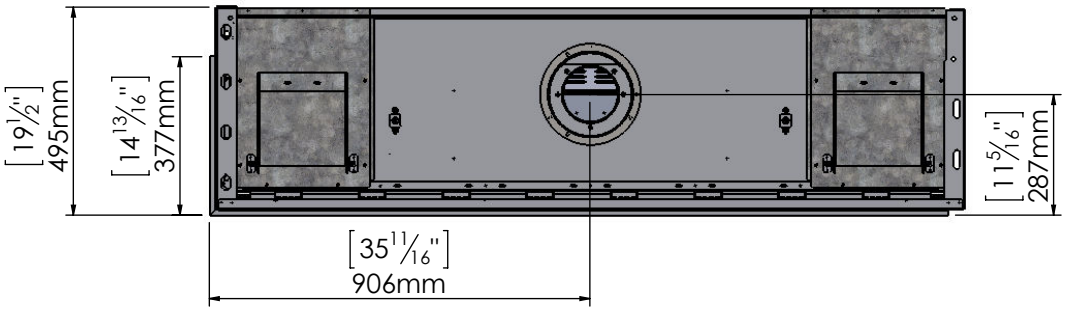

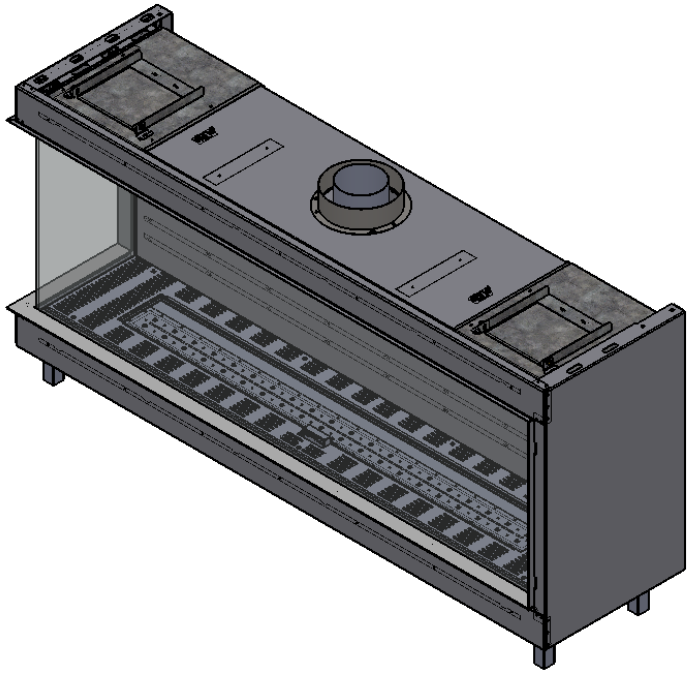

11/22/2018