ORTAL
YOUR LIFE. YOUR FIRE

110 TS
STAND ALONE

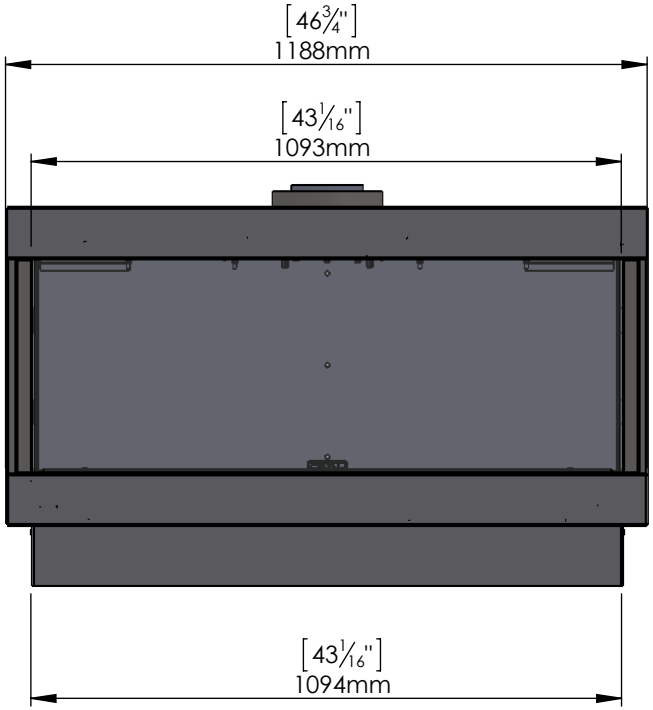

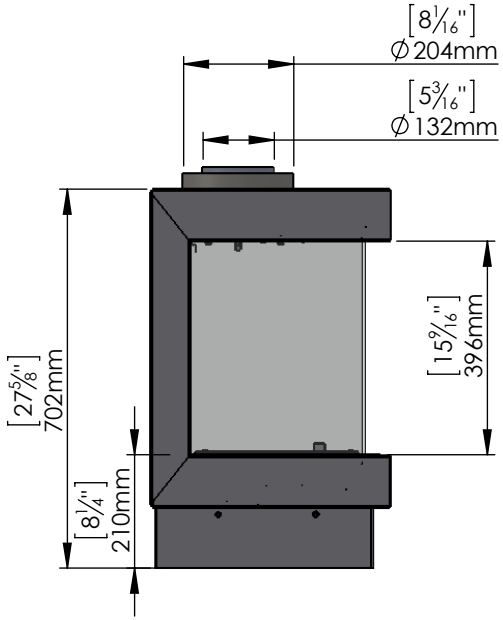

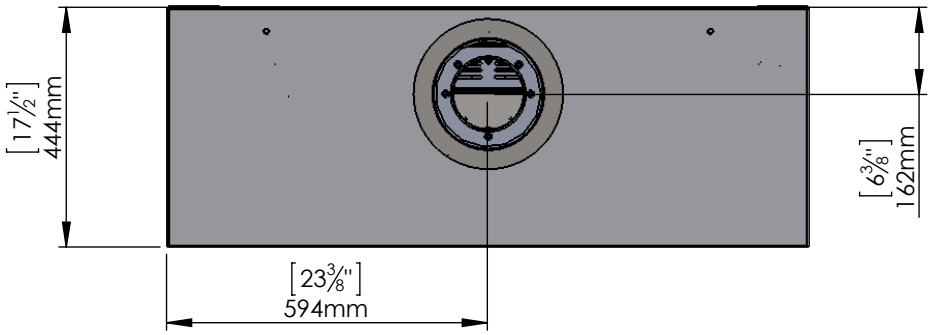

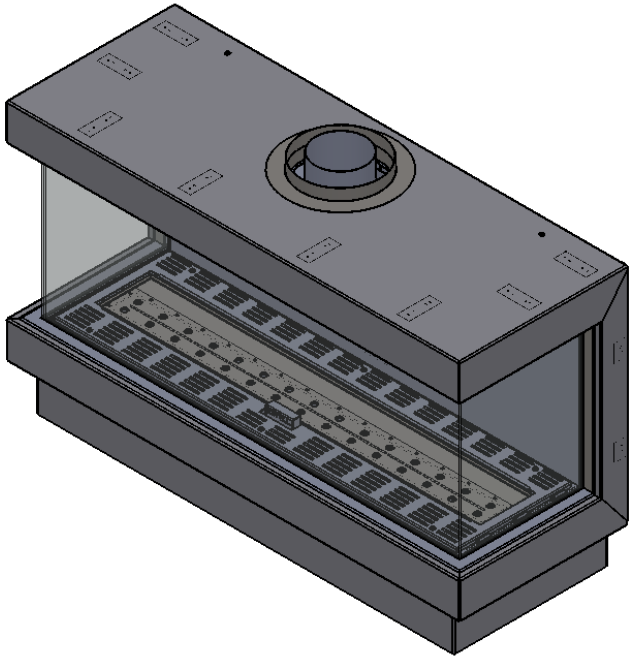

11/25/2018